(NOTE: DESIGNER LOCKER SHOWN WITHOUT SIDE PANEL OR SLOPING HOOD. PLEASE ORDER SEPARATELY.)

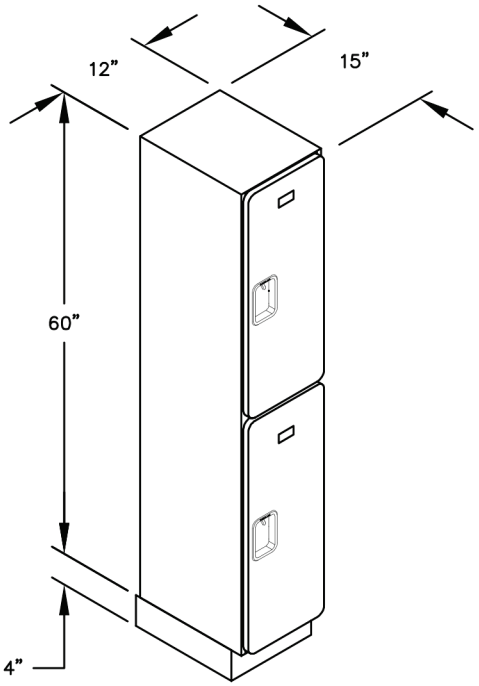

SIDE VIEW

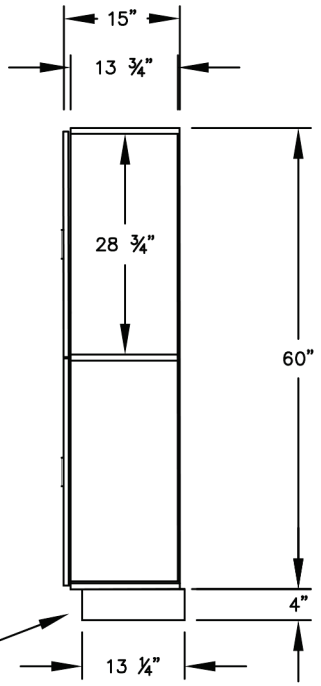

(BASES ARE MADE OF INDUSTRIAL GRADE PARTICLEBOARD AND ARE COVERED IN A DURABLE BLACK LAMINATE. PLEASE SET BASE TO ALLOW 5/8" BETWEEN THE BACK OF THE LOCKER AND THE WALL FOR AIR VENTILATION.)

NOTES:
MODEL #H32155
12" WIDE DESIGNER WOOD LOCKERS
DOUBLE TIER - 1 WIDE

2 LOCKER COMPARTMENTS
EACH COMPARTMENT: 10-3/4"W x 28-3/4"H x 13-3/4"D

PRODUCT SERIES:
12" WIDE DESIGNER WOOD LOCKERS

NATIONAL MAILBOXES
A DIVISION OF NMHP INC.
North America's Commercial & Residential Mailbox Leader!
Address: P.O Box 13144, Wauwatosa, WI 53213
Phone Number: 1-800-676-5161
Website: www.NationalMailboxes.com

MODEL	H32155	REV	
SCALE	NONE	LAST REV DATE	07/2018
DRAWING NUMBER		DRAWN BY	